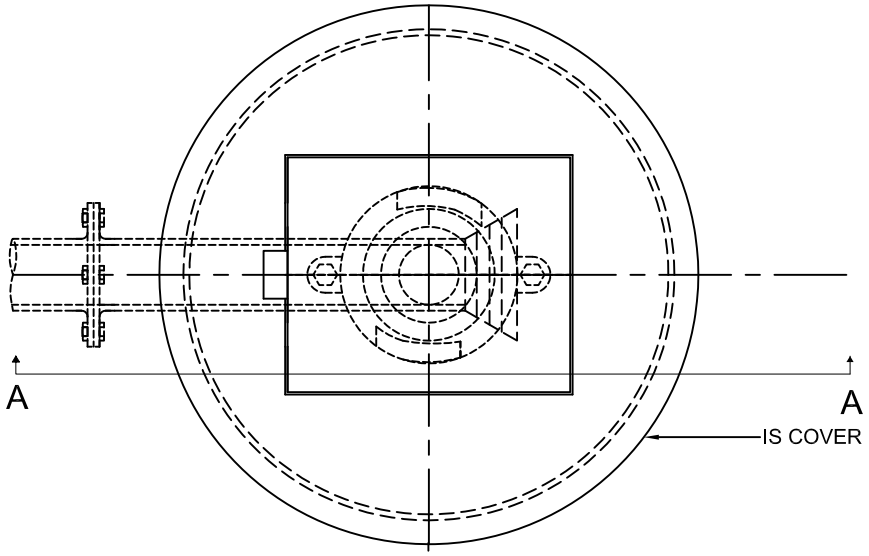

PLAN

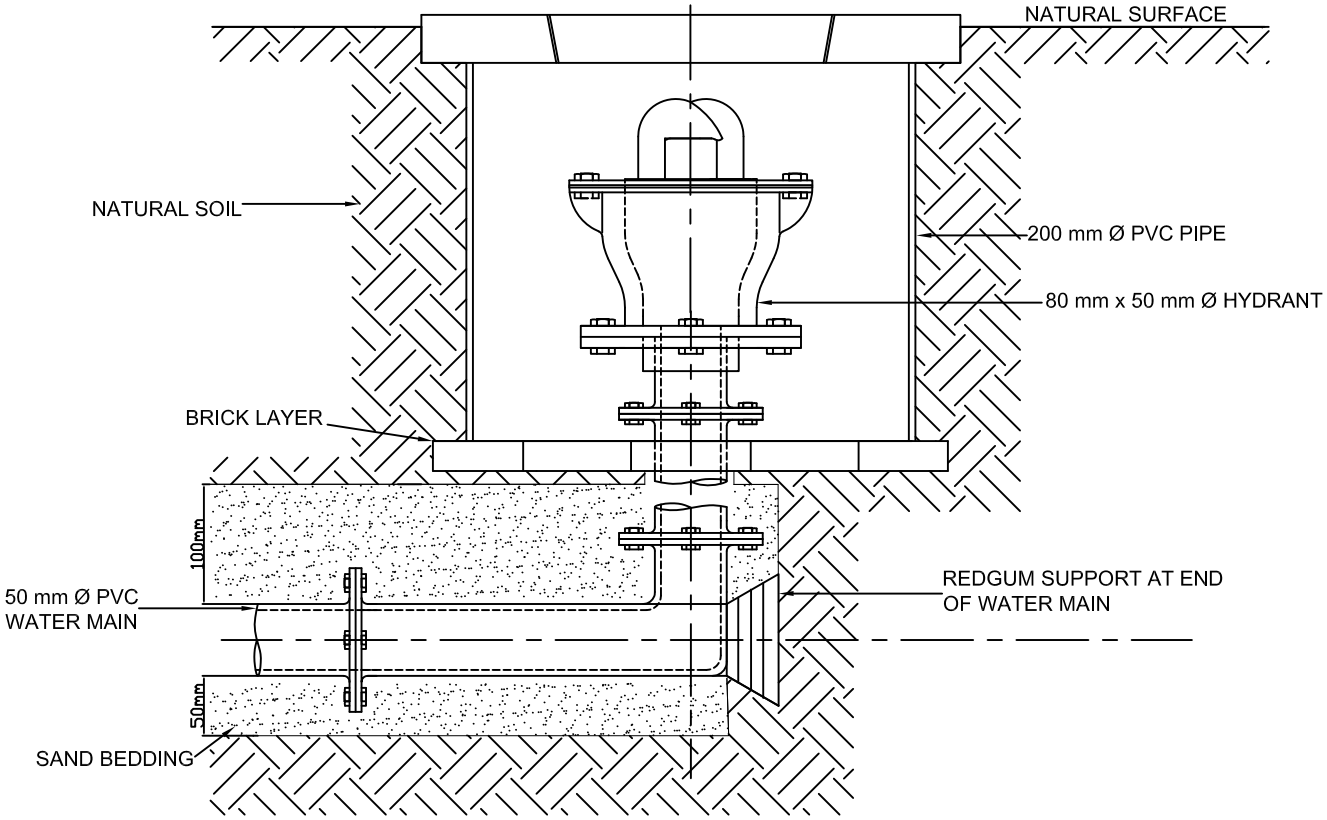

SECTION AT A-A

NOTE:
1. All joints must be solvent welded
2. Dimension of the Redgum suport as per design.
3. All bolts to be galvanised
4. Flanged and solvent welded joints applicable

Wentworth Shire Council

STANDARD
80mm Ø HYDRANT FITTED TO
50mm Ø MAIM AT THE END

DATE:
May 2005

DRAWING NUMBER:
127-106